Bellows Couplings

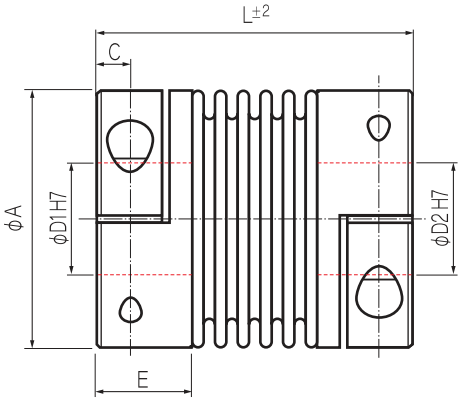

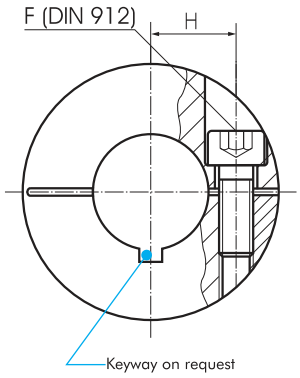

Order Code: KB 4 / 60 - 89 - 12 - 32 - S

Type / Size	Length	Ø D1 (H7)	Ø D2 (H7)	Options

	Torque	Dimensions (mm)							Technical Ratings								
		L	Ø A	D1/D2	H	C	E	F	Mass	Moment of Inertia	Spring Stiffness			Misalignment			max Speed
	T_{KN} (Nm)	Length (±2)	Outer Ø	Bore Sizes (H7)				Screw (DIN 912) T_A (Nm)	(kg)	J (g m²)	torsional C_T 10^3 (Nm/rad)	radial C_R (N/mm)	axial C_A (N/mm)	radial ΔKr (mm)	axial ΔKa (mm)	angular ΔKw (°)	rpm
KB4/18	18	63	45	10-25.4	17	5.5	19.5	M5	0.1	0.04	20	205	50	0.2	0.5	1.5	12800
		71						8	0.15	0.05	15	82	36	0.25	0.5	2	12800
KB4/30	30	65	56	10-30	20	7.5	24.5	M6	0.3	0.15	38	720	50	0.15	0.6	1.5	10300
		73						15	0.32	0.16	28	225	28	0.25	1	2	10300
KB4/60	60	79	66	12-32	23	10	29	M8	0.5	0.33	75	1150	90	0.15	0.6	1.5	8700
		89						40	0.6	0.36	50	340	50	0.25	1	2	8700
KB4/80	80	91	82	14-42	28	11	33.5	M10	2.3	2.3	128	1200	80	0.2	0.5	1.5	6900
		102						72	2.4	2.4	75	400	50	0.25	0.8	2	6900
KB4/150	150	91	82	19-42	28	11	33.5	M10	2.3	2.5	155	2020	145	0.2	0.5	1.5	6900
		102						84	2.4	2.6	105	595	85	0.25	0.5	2	6900
KB4/200	200	101	90	22-45	31	13	38	M12	2.6	3.3	175	2500	145	0.2	0.5	1.5	6400
		113						125	2.7	3.5	120	460	82	0.25	0.8	2	6400
KB4/300	300	105	110	30-60	40	13	38	M12	4.3	7.6	502	6300	280	0.2	0.5	1.5	6000
		116						145	4.4	7.8	285	1400	145	0.25	0.8	2	6000
KB4/500	500	112	122	35-70	42	15	42	M12	5.5	13.5	690	7790	100	0.2	0.5	1.5	5000
		123						145	5.6	13.7	320	970	85	0.25	1	2	5000
KB4/800	800	168	157	40-80	55	22.5	55	2M20	9	35	1270	700	275	0.2	0.8	1.8	5000
								400									
KB4/1400	1400	168	157	50-80	55	22.5	55	2M20	10	36	1270	700	275	0.2	0.8	1.8	5000
								470									

Bellows: Stainless Steel

Material-Hubs:

Size	Standard	Options
18 - 60	Aluminium	Stainless Steel
80 - 500	Steel	Aluminium, Stainless Steel
800 - 1400	Steel	Stainless Steel

Temperature Range: -30°C ~ 120°C