# KBK/L-I-10~1400

## Safety Couplings

with Inner Cone

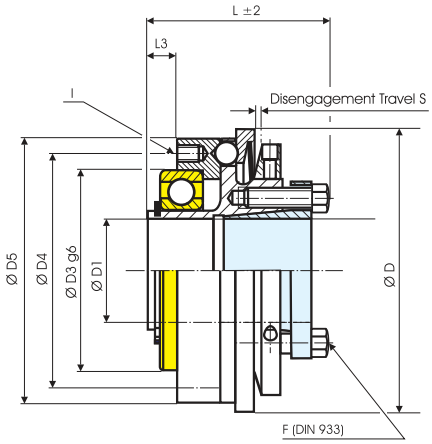


**Order Code: KBK/L - I - 60 - 20H7 - 20Nm - C oder D - 2**

Type - Size | Bore D1(H7) | Disengagement Torque | Overload Torque Range

Single Position =C | D= Multi Position Engagement

| KBK/L-I-x | Dimensions (mm) | | | | | | | | | | Technical Ratings | | | | |
|---|---|---|---|---|---|---|---|---|---|---|---|---|---|---|---|
| | Ø D | Ø D1 | Ø D3 | Ø D4 | Ø D5 | L | L3 | S | I | F | Overload Torque adjustable | | Maximum Speed | Mass | Moment of Inertia |
| | Outer Ø | Bore Size (H7) min ~ max | | | | Length | | | 6 x | Screw (DIN 933) $T_A$ (Nm) | 1 TKN (Nm) | 2 TKN (Nm) | rpm. (1/min) | (kg) | J (kg cm²) |
| -10 | 49 | 6-14 | 37 | 42 | 47 | 36 | 5 | 0.7 | M3 | M3 / 4 | 3-7 | 5-10 | 12000 | 0.18 | 0.4 |
| -30 | 64 | 12-20 | 47 | 53 | 60 | 43 | 6 | 1.2 | M4 | M5 / 6 | 5-15 | 10-30 | 9400 | 0.54 | 2.2 |
| -60 | 79 | 15-25 | 62 | 69 | 75 | 58 | 8 | 1.2 | M5 | M6 / 8.5 | 13-35 | 20-65 | 7800 | 1.01 | 6.2 |
| -80 | 94 | 20-35 | 68 | 80 | 90 | 60 | 10 | 2 | M6 | M6 / 14 | 15-40 | 30-80 | 6400 | 1.72 | 15 |
| -150 | 94 | 20-35 | 68 | 80 | 90 | 60 | 10 | 2 | M6 | M6 / 14 | 50-130 | 65-150 | 5500 | 1.72 | 15 |
| -200 | 109 | 20-40 | 80 | 90 | 105 | 66 | 10 | 2 | M6 | M6 / 14 | 30-90 | 80-200 | 5500 | 2 | 24 |
| -300 | 119 | 25-50 | 90 | 102 | 115 | 75 | 10 | 2 | M8 | M8 / 20 | 60-200 | 150-300 | 5000 | 3.3 | 49 |
| -500 | 129 | 35-55 | 100 | 112 | 125 | 75 | 10 | 2 | M8 | M8 / 26 | 80-250 | 200-500 | 4500 | 4.7 | 83 |
| -800 | 169 | 50-70 | 110 | 125 | 165 | 110 | 15 | 2 | M12 | M16 / 45 | 260-600 | 500-900 | 3500 | 13.1 | 380 |
| -1400 | 169 | 50-70 | 110 | 125 | 165 | 110 | 15 | 2 | M12 | M16 / 80 | 450-900 | 800-1400 | 3500 | 13.2 | 385 |

- Keyway acc. DIN 6885 optional
- Temperature Range: -30°C ~ 120°C