ST2

WITH SIMPLE KEYWAY MOUNTING

2 - 165 KNm

ABOUT

MATERIAL

- **Safety coupling portion:** hardened steel (nitrocarburized surface)
- **Elastomer segments:** precision molded, wear resistant rubber compound (75-80 Shore A)
- **Elastomer coupling:** hubs made from coated high strength cast steel

DESIGN

With keyway connection (spline profile on request). Elastomer segments compensate for misalignment and absorb vibration. Safety elements evenly spaced around the circumference. Field adjustable within the specified range.

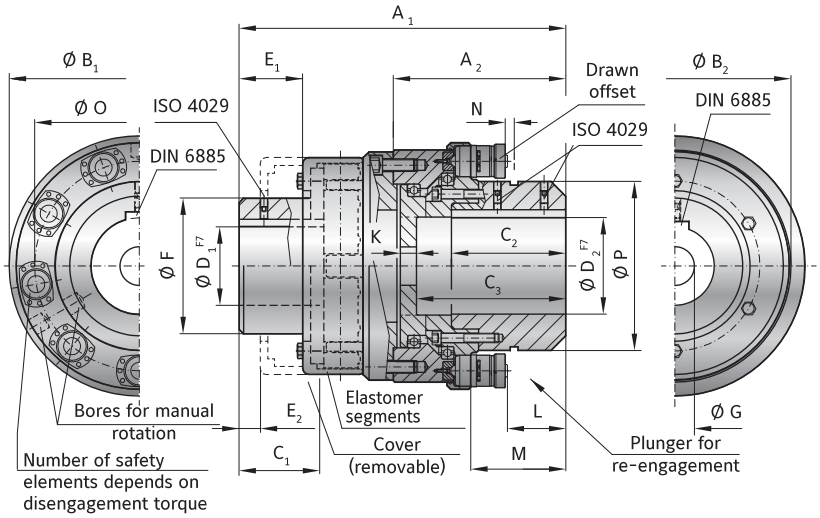

MODEL ST2

SIZE			10			25			60			160		
Adjustment range available from - to	(KNm)		2-6	4-12	6-18	3-8	5-16	10-25	11-20	22-40	35-60	25-55	50-110	80-165
			3 x ST 15	6 x ST 15	9 x ST 15	3 x ST 15	6 x ST 15	9 x ST 15	3 x ST 30	6 x ST 30	9 x ST 30	3 x ST 70	6 x ST 70	9 x ST 70
Overall length ±2	(mm)	A_1	360			437			580			730		
Length of torque limiting portion	(mm)	A_2	183			230			320			410		
Flange outside diameter (ST portion)	(mm)	B_1	270			318			459			648		
Flange outside diameter (elastomer portion)	(mm)	B_2	290			330			432			553		
Fit length/keyway length D1	(mm)	C_1	97			116			160			230		
Fit length/keyway length D2	(mm)	C_2	120			155			220			290		
Bore depth (torque limiting portion)	(mm)	C_3	158			200			275			360		
Bore diameter (elastomer portion) Ø - Ø F7	(mm)	D_1	40-105*			60-130*			80-160*			100-200*		
Bore diameter (torque limiting portion) Ø - Ø F7	(mm)	D_2	40-110*			60-140*			80-200*			100-290*		
Length to cover	(mm)	E_1	70			87			112			152		
Length to (cover removed)	(mm)	E_2	22			26			40			65		
Hub diameter	(mm)	F	160			200			255			300		
Bore for fastening screw	(mm)	G	max. 110			max. 140			max. 200			max. 290		
Distance	(mm)	L	45			83			96			136		
Distance	(mm)	M	95			130			165			225		
Actuation path	(mm)	N	4			4			7.5			10		
Mounting diameter - elements	(mm)	O	220			270			376			532		
Hub outside diameter	(mm)	P	170			218			295			418		
Moment of inertia (approx.) D max. (10^{-3} kgm²)			854			1850			8960			36858		
Speed max.	(rpm)		2700			2300			1800			1500		
Approx. weight at D max.	(kg)		80			115			287			729		
Axial	(mm)		1.5			1.5			2			2.5		
Lateral	(mm)		0.4			0.5			0.6			0.7		
Angular	(Grad)		1			1			1			1		
Dynamic torsional stiffness at T_{KN} (Standard A Insert)	(10^3 Nm/rad)		145			230			580			1000		

* larger bore diameters upon request.

THE ELASTOMER SEGMENT

The compensating elements of the ST2 safety couplings are the elastomer segments. They transmit torque while damping vibration and compensating for lateral, axial and angular misalignment. Three different versions are available with version A being supplied unless otherwise specified.

Type	Relative damping (ψ)	Temperature range constant	peak	Material	Shore hardness	Features
A (Standard)	1.0	-40°C to +80°C	+90°C	Natural and synthetic rubber	75-80 Shore A	Very high wear resistance
B	1.0	-40°C to +100°C	+120°C	Synthetic rubber	73-78 Shore A	Resistant to many oils and fuels
C	1.0	-70°C to +120°C	+140°C	Silicone rubber	70-75 Shore A	High temperature range

▶ **Note**

Elastomer segments can be easily changed after installation. Every coupling utilizes 6x elastomer segments. The elastomer segments do not need to be installed prior to coupling mounting.

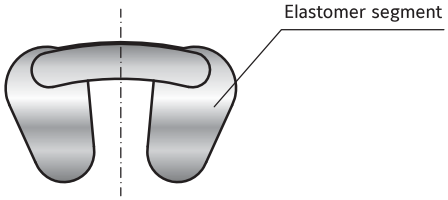

CHANGING THE ELASTOMER SEGMENTS

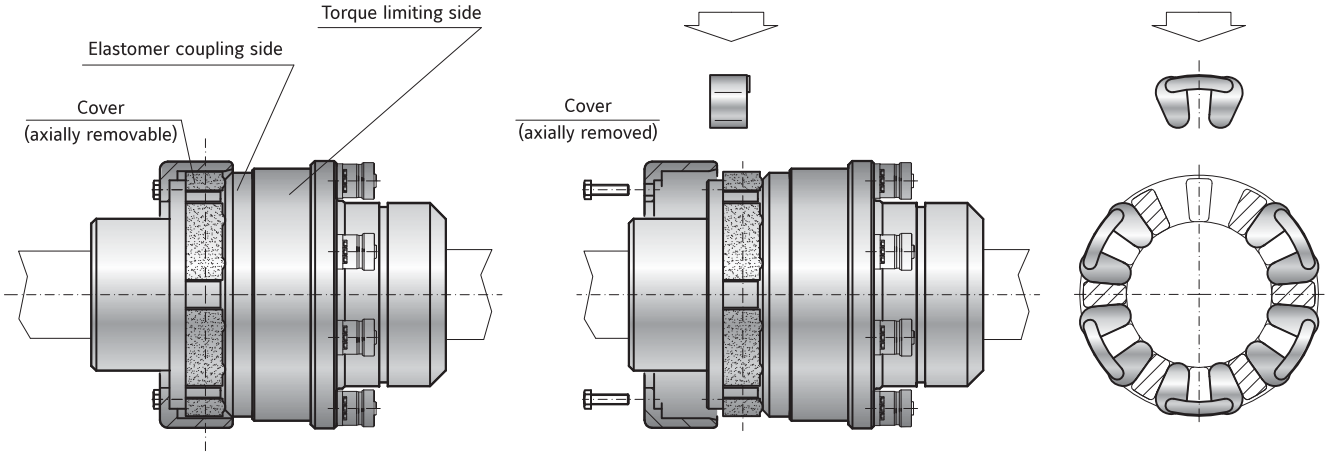

For easier handling, the coupling will be shipped unassembled.

ORDERING EXAMPLE	ST2	025	10-25	15	127	117.48	XX
Model	●						Special designation only (e.g. custom output flange)
Size		●					
Adjustment range (KNm)			●				
Disengagement torque (KNm)				●			
Bore Ø D1 F7					●		
Bore Ø D2 F7						●	
For custom features place an XX at the end of the part number and describe the special requirements (e.g. ST2 / 025 / 10-25 / 15 / 127 / 117.48 / XX)							