EZ2

WITH FULLY SPLIT CLAMPING HUB

9 - 25,000 Nm

ABOUT

FEATURES

- easy installation and removal
- standard lengths up to 4 meters
- no intermediate support bearings required

MATERIAL

- **Hubs:** up to size 450 high strength aluminum, size 800 steel, size 2500 and up GGG40
- **Intermediate tube:** up to size 450 high strength aluminum, size 800 and up steel, optional CFK tube on request
- **Elastomer insert:** wear resistant, thermally stable TPU

DESIGN

Two fully split clamping hubs, with two clamping screws in each, and concave driving jaws. Backlash free, vibration damping, electrically isolating elastomer inserts press fit into the hubs. Precision intermediate tube with a high level of straightness and lateral stiffness.

DESIGN | SIZE 10 - 800

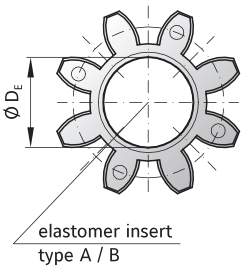

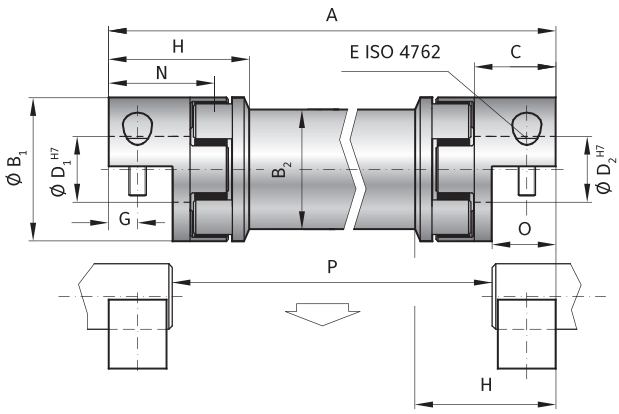

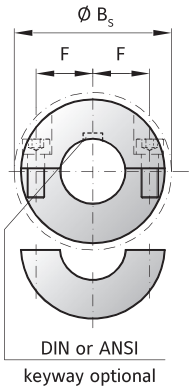

DESIGN | SIZE 2,500 - 9,500

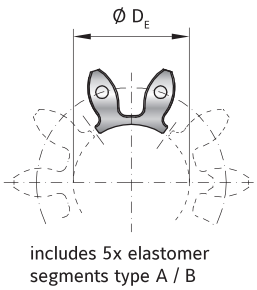

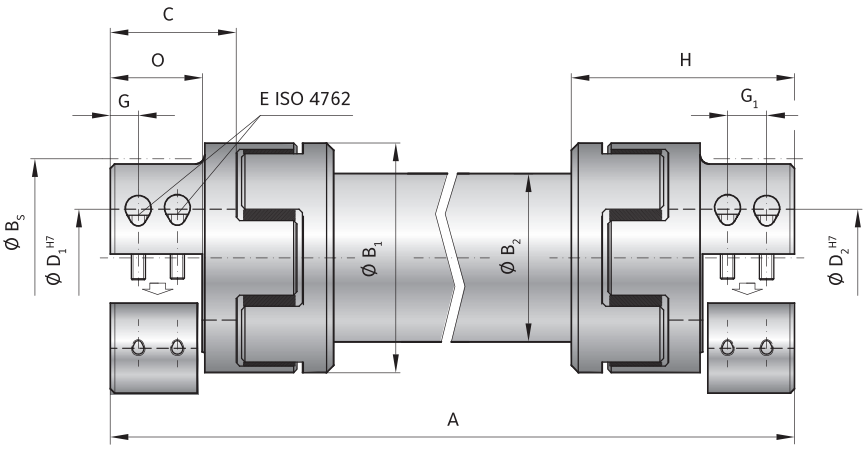

For details on the elastomer inserts see pages 66-67.

All data subject to change without notice.

MODEL EZ2

SIZE		5		10		20		60		150		300		450		800		2500		4500		9500	
Type (Elastomer insert)		A	B	A	B	A	B	A	B	A	B	A	B	A	B	A	B	A	B	A	B	A	B
Rated torque (Nm)	T_{KN}	9	12	12.5	16	17	21	60	75	160	200	325	405	530	660	950	1,100	1,950	2,450	5,000	6,200	10,000	12,500
Max. torque* (Nm)	T_{Kmax}	18	24	25	32	34	42	120	150	320	400	650	810	1060	1350	1,900	2,150	3,900	4,900	10,000	12,400	20,000	25,000
Overall length (mm)	A	75 - 3,000		95 - 4,000		130 - 4,000		175 - 4,000		200 - 4,000		245 - 4,000		280 - 4,000		320 - 4,000		460 - 4,000		580 - 4,000		710 - 4,000	
Outside diameter hub (mm)	B_1	25		32		42		56		66.5		82		102		136.5		160		225		290	
Outside diameter tube (mm)	B_2	25		28		35		50		60		76		90		120		150		175		220	
Outside diameter with screwhead(mm)	B_S	25		32		44.5		57		68		85		105		139		155		190		243	
Fit length (mm)	C	8		20		25		40		47		55		65		79		85		110		140	
Inside diameter range from Ø to Ø H7 (mm)	$D_{1/2}$	5 - 12.7		5 - 16		8 - 25		14 - 32		19 - 36		19 - 45		24 - 60		35 - 80		35 - 90		40 - 120		50 - 140	
Max. inside diameter (Elastomer insert) (mm)	D_E	10.2		14.2		19.2		26.2		29.2		36.2		46.2		60.5		80		111		145	
Mounting screw ISO 4762	E	4 x M3		4 x M4		4 x M5		4 x M6		4 x M8		4 x M10		4 x M12		4 x M16		4 x M16		8 x M16		8 x M24	
Tightening torque (Nm)	E	2		4		8		15		35		70		120		290		300		300		980	
Distance between centers (mm)	F	8		10.5		15.5		21		24		29		38		50.5		57		72.5		90	
Distance (mm)	G/G_1	5		7.5		8.5		15		17.5		20		25		30		36		24 /34		30 / 48	
Coupling length(mm)	H	25		34		46		63		73		84		97		125		142		181		229	
Moment of inertia per hub (10^{-3} kgm²)	J_1/J_2	0.004		0.01		0.02		0.15		0.21		1.02		2.3		17		30		140		450	
Inertia of tube per meter (10^{-3} kgm²)	J_3	0.049		0.075		0.183		0.66		1.18		2.48		10.6		38		360		750		1,800	
Combined dynamic torsional stiffness of the inserts (Nm/rad)	C_{Tdyn}^E	150	350	270	825	1,270	2,220	3,970	5,950	6,700	14,650	11,850	20,200	27,700	40,600	41,300	90,000	87,500	108,000	168,500	371,500	590,000	670,000
Torsional stiffness of tube per meter (Nm/rad)	C_T^{ZWR}	503		321		1,530		6,632		11,810		20,230		65,340		392,800		1,000,000		2,500,000		5,000,000	
Shaft average value (mm)	N	18		26		33		49		57		67		78		94		108		137		171	
Length (mm)	O	11		16.6		18.6		32		37		42		52		62		67		85		105	

* Maximum transmittable torque of the clamping hub depends on the bore diameter (see pages 70-71).

INSTALLATION

The overall length A is best determined as the distance between shaft ends P plus 2x dimension O.

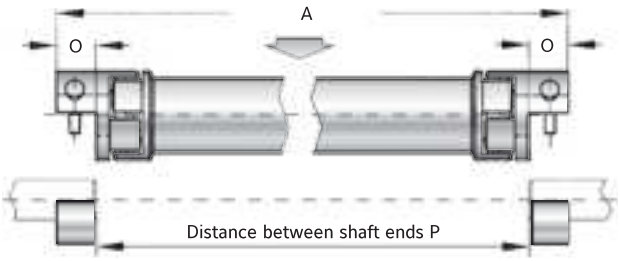

ORDERING EXAMPLE	EZ2	20	1200	A	24	19.05	XX
Model	●						Special designation only (e.g. special bore tolerance).
Size		●					
Overall length mm			●				
Elastomer insert type				●			
Bore D1 H7					●		
Bore D2 H7						●	

For custom features place an XX at the end of the part number and describe the special requirements (e.g. EZ2 / 20 / 1200 / A / 24 / 19.05 / XX; XX=anodized aluminum)